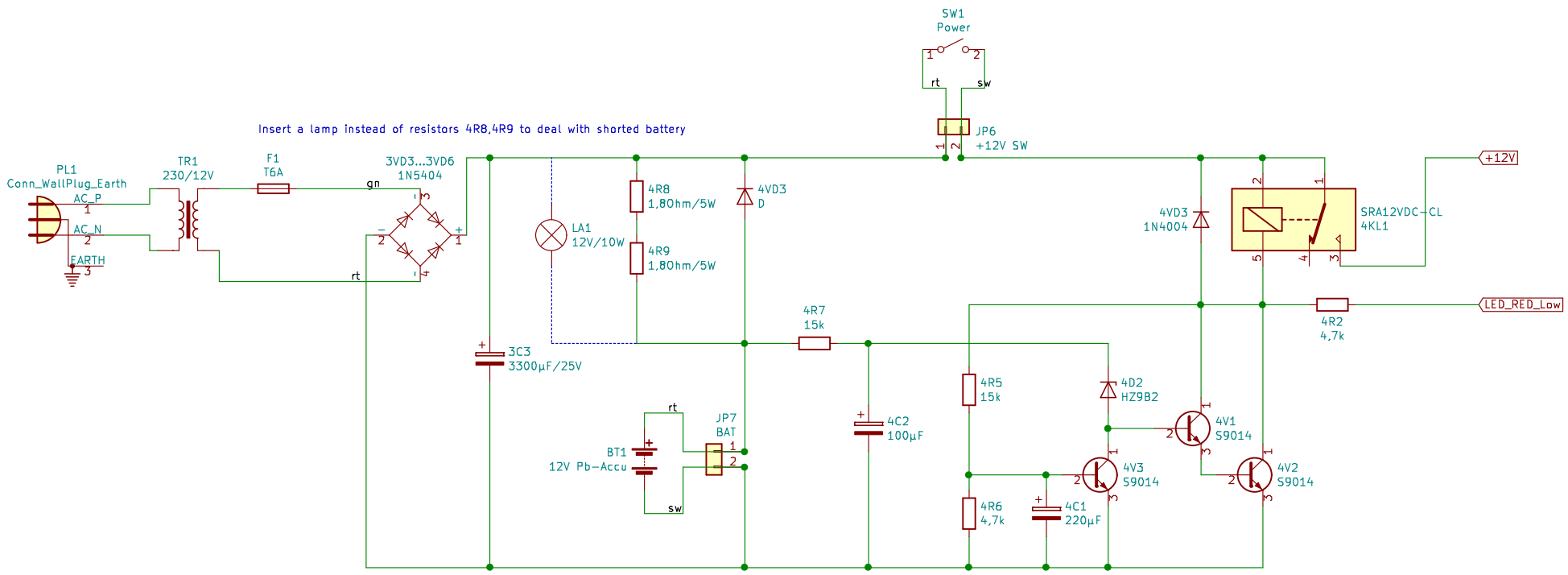

Hollywood Port-8 Mini USB

Sheet: /

File: noname.sch

Title: Power Supply

Size: A4	Date: 2021-04-11	**Rev:**
KiCad E.D.A. eeschema 5.0.2+dfsg1-1		Id: 1/1